For the installer

Vaillant

Operating and
Installation Manual

VRT 50

Room thermostat

GB

0020030718_00 GB 04 2006

Vaillant Ltd
Vaillant House ▪ Medway City Estate
Trident Close ▪ Rochester ▪ Kent ME2 4EZ
Telephone 01634 292300 ▪ Fax 01634 290166
www.vaillant.co.uk ▪ info@vaillant.co.uk

Notes on the documentation

The following notes are intended to help you throughout the entire documentation.
Further documents apply in combination with this operating and installation manual.
We accept no liability for any damage caused by failure to observe these manuals.

Storage of the documents
Please pass on this operating and installation manual to the owner of the system so that he or she can make it available whenever it is required.

Symbols used
Please observe the safety instructions in this manual for the installation of the device.

Note!
Useful information and instructions

• Symbol for a necessary task

Safety

The (programmable) room thermostat must be installed by an approved qualified servicing company, which is responsible for adhering to the existing standards and regulations.

Operating instructions

1 Overview

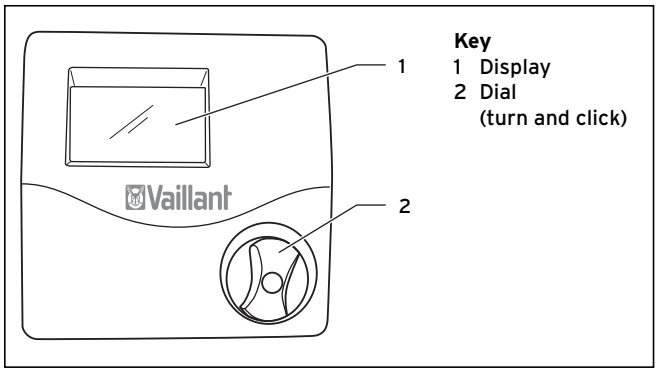

Fig. 1.1 Overview of the device

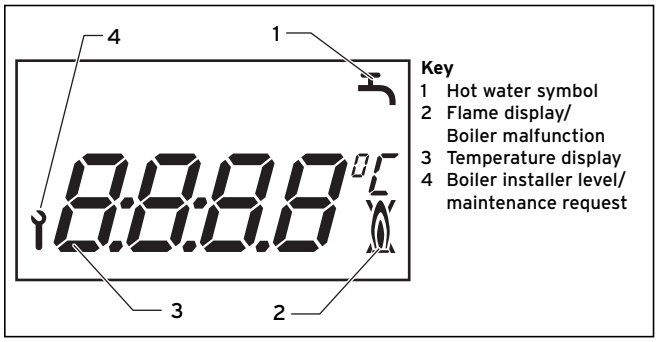

Fig. 1.2 Overview of the display

2 Description of the device

The VRT 50 is a (programmable) room thermostat for heating which is connected to Vaillant boilers with eBus. The VRT 50 can also be used to switch the hot start function of the boiler on or off.

You can preset the target room temperature for the heating with the VRT 50.
Furthermore the controller shows you the heating requirements for hot water and operation or any malfunction/maintenance messages of the boiler.

3 Operation

The operating principle is based on a dial (Vaillant "turn and click" operating concept).
The current room temperature is displayed on the basic display. The hot water symbol is displayed whenever there is a hot water requirement or the hot start function is activated.
The "flame" symbol is displayed when the boiler is in operation. The "boiler malfunction" symbol is displayed if there is malfunction to the boiler. Maintenance requests of the boiler are indicated by the "spanner" symbol flashing.

3.1 Setting the target room temperature

The current room temperature is displayed on the basic display.

- Turn the dial (basic display).

The ACTUAL temperature disappears from the display and the set target room temperature appears and starts to flash.

- You can set the target room temperature directly (after about 1 second) to the desired value by turning the dial.

The basic display reappears after about 5 seconds.

3.2 Activating the hot start function

The hot start function of the boiler can be switched on or off with the VRT 50.
This is convenient for long periods of absence to avoid unnecessary consumption of energy.

Note!
To use this function, you need to have activated the hot start function on your boiler. You can find appropriate instructions in the operating manual of your boiler.

- You can switch on the hot start function by pressing and turning (after one second) the dial.
- You can switch off the hot start function by pressing and turning (after one second) the dial again.

4 Vaillant warranty

See supplement 0020029010.

5 Recycling and disposal

Neither your (programmable) room thermostat nor any of its accessories belong in the household waste.
Make sure the old device and any existing accessories are disposed of properly.

Installation instructions

6 Notes on the installation and operation

The installation, electrical connection, settings and initial start-up of the device may be performed only by an approved qualified servicing company.

6.1 CE label

The CE label documents that the VRT 50 (programmable) room thermostat, when connected to Vaillant boilers, meets the basic requirements of the directive on electromagnetic compatibility (89/336/EEC) and the low voltage directive (73/23/EEC).

6.2 Intended use

The VRT 50 (programmable) room thermostat is a state-of-the-art device which has been constructed in accordance with recognised safety regulations. Nevertheless, there is still a risk of death or injury to the user or others or of damage to the device and other property in the event of improper use or use for which it is not intended.
The VRT 50 (programmable) room thermostat is used for the room-dependent control of a heating system with boiler with eBUS interface from Vaillant.
Any other use or extended use is considered to be improper. The manufacturer/supplier is not liable for any resulting damage. The owner alone bears the risk.
Intended use includes the observance of the operating and installation manual.

7 Safety instructions and regulations

The device must be installed by an approved qualified servicing company, which is responsible for adhering to the existing standards and regulations.
We accept no liability for any damage caused by failure to observe these instructions.

All wiring must be in accordance with Building Regulations Part P and BS 7671 (IEE Wiring Regulations), and must be carried out by a suitably qualified person.

Use standard commercial cables for wiring.
- Minimum cross-section of the wires: 0.75 mm^2

Do not exceed the following maximum wire lengths:
- Bus lines: 300 m

230 V connection lines and bus lines must be laid separately if they are longer than 10 m.
The controller may only be installed in dry rooms.

8 Installation

8.1 Place of installation

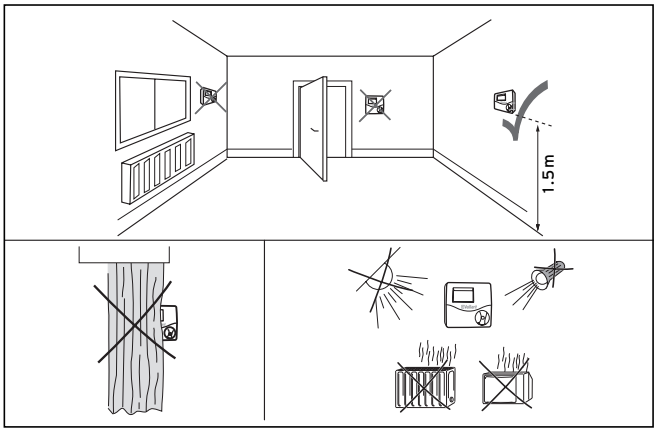

Fig. 8.1 Selecting the place of installation

8.2 Mounting the room thermostat

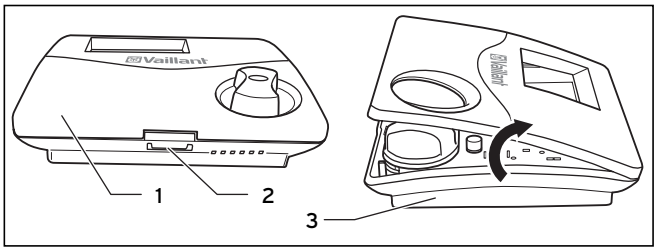

Fig. 8.2 Opening the (programmable) room thermostat

The thermostat is connected to the boiler with a two-wire bus cable (eBUS).

- Open the (programmable) room thermostat by undoing the snap-fit on the bottom (**2**), flapping the cover of the housing (**1**) upwards and removing it from the base of the housing (**3**).

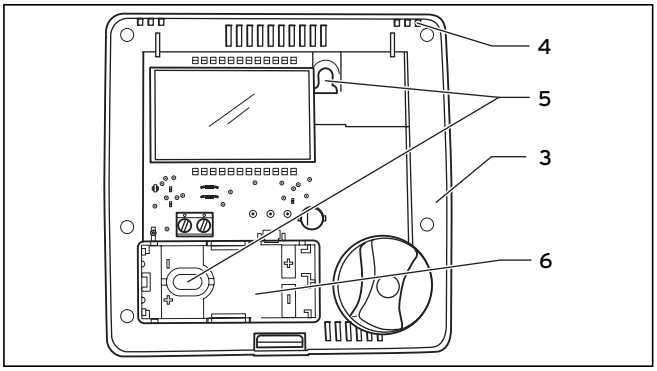

Fig. 8.3 Mounting the (programmable) room thermostat

- Drill two holes (**5**) of 6 mm diameter and insert the supplied wall plugs.
- Lay the connection cable through the duct (**6**).
- Attach the housing base (**3**) to the wall with the two screws provided.
- Connect the connection cable as described in Section 10.
- Close the housing by placing the cover of the housing with the top edge in the snap-fit (**4**) of the housing base, flapping it downwards and pressing it until you hear it snap into place in the housing base.

9 Electrical installation

The electrical connection may be carried out only by an approved qualified servicing company.

9.1 Connecting the room thermostat

The thermostat communicates with the boiler via a two-wire bus cable (eBUS). All eBUS connector plugs are designed to allow you to wire at least 2 x 0.75 mm^2 (recommended) per connection terminal. This means that the wires can be swapped without impairing communication (see Fig. 9.1). Also follow the instructions for the boiler.

Note!
- **A bridge must be inserted at the boiler between terminals 3 and 4 when operating the VRT 50.**
- **No other eBUS controllers can be connected to the boiler in addition to the VRT 50.**

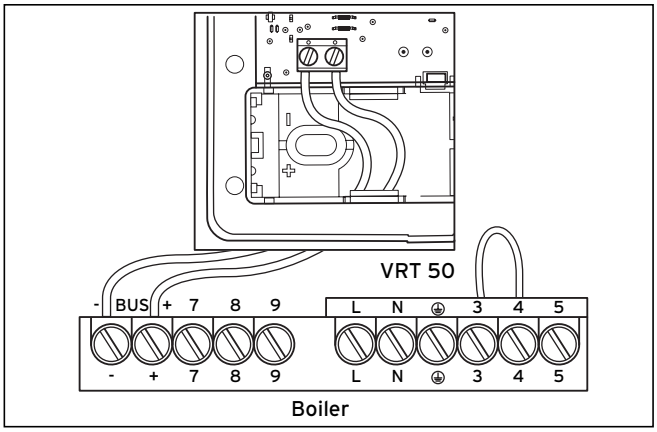

Fig. 9.1 Electrical connection

10 Start-up

No additional settings are required for the start-up. The heating engineer can additionally adapt the (programmable) room thermostat to the environment or the preferences of the user.

10.1 Installer level

You can go to the installer level by pressing the dial for about 10 seconds.
The spanner symbol appears on the display.

- You can switch to the next parameter by pressing the dial.

The following parameters can be set:
Parameter 1: Setting of a minimum temperature as a lower limit for the control range
You can set a minimum temperature by turning the dial.
Setting range 5 ... 30° C (default setting: 5° C)

Parameter 2: Switchover between two-point and continuous control
You can change the parameter by turning the dial.
0 = two-point control (default setting)
1 = continuous control

You can exit the installer level as follows:

- Press the dial for about 5 seconds

or

- After 5 minutes if you do not operate the dial.

The basic display then reappears.

10.2 Handing over the device to the owner

The owner of the (programmable) room thermostat must be instructed about its functions and how to operate it.

- Hand over the manuals intended for the owner as well as the documents of the device.
- Go through the operating manual with the owner and answer any questions.
- Draw special attention to the safety instructions, which the owner must follow.

11 Technical data

Description	Unit	Value
Operating voltageU_{max}	V	24
Maximum permissible ambient temperature	°C	50
Current consumption	mA	17
Minimum cross-section of the connection lines	mm^2	0.75
Level of protection		IP 20
Protection class for controller		III
Dimensions		
Height	mm	97
Width	mm	97
Depth	mm	27

Table 11.1 Technical data

12 Vaillant service

To ensure regular servicing, it is strongly recommended that arrangements are made for a Maintenance Agreement. Please contact Vaillant Service Solutions (0870 6060 777) for further details.